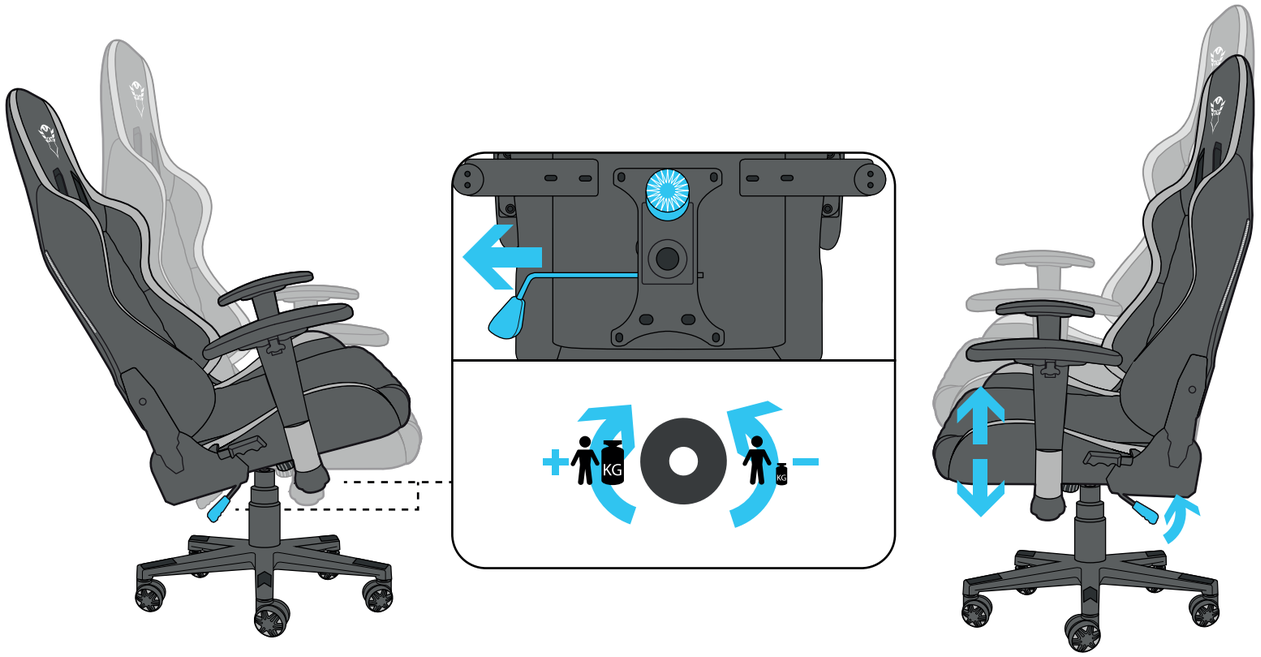

FAQ: www.trust.com/23845/faq

©2021 Trust International B.V. - All rights reserved | Laan van Barcelona 600, 3317DD, Dordrecht, NL

Trust

RIZZA | Gaming Chair

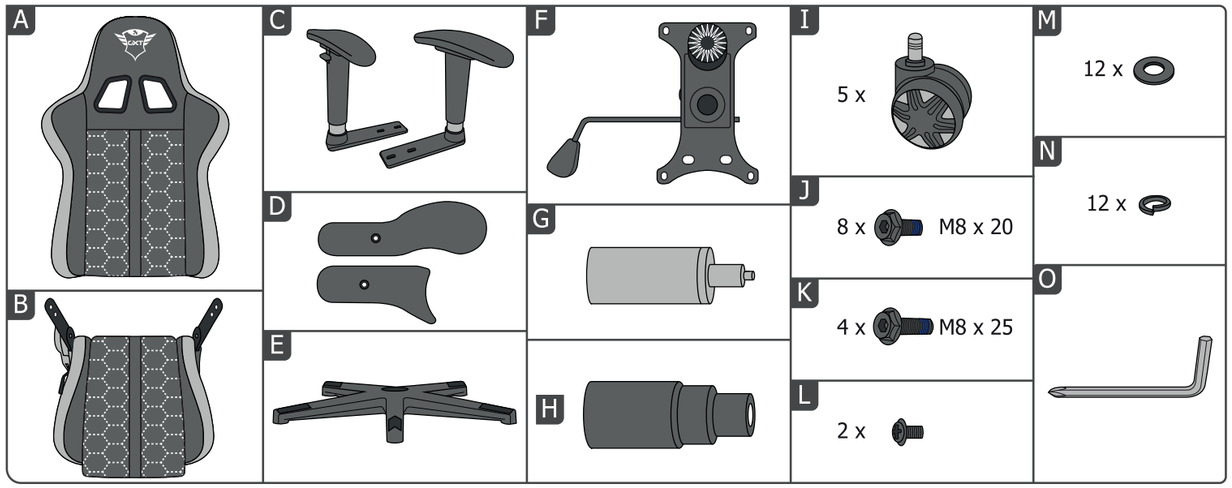
A
B
C
D
E
F
G
H
I
5 x
J
8 x
M8 x 20
K
4 x
M8 x 25
L
2 x
M
12 x
N
12 x
O

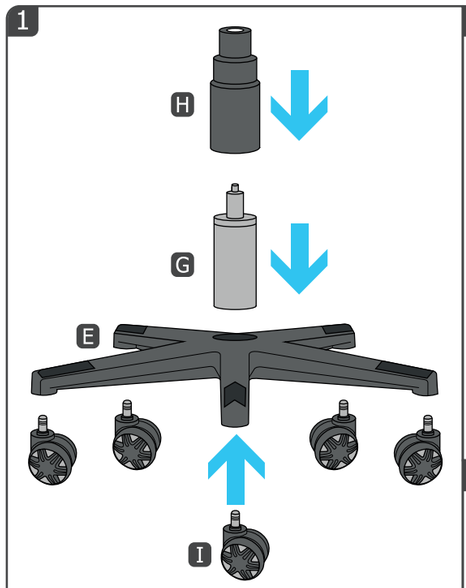
1
H
G
E
I

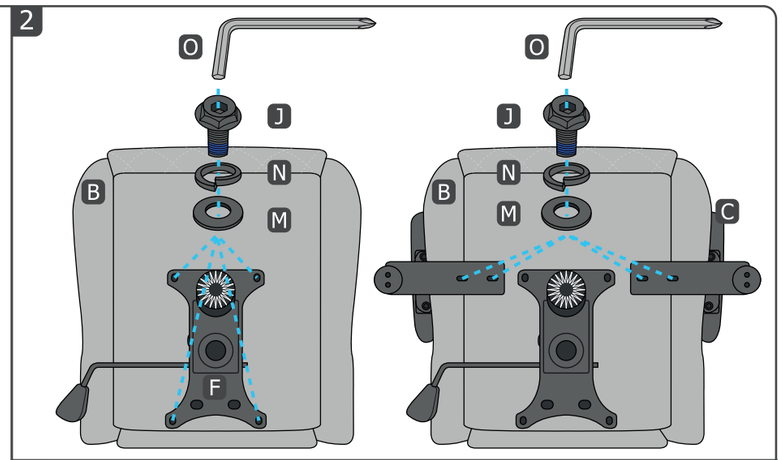
2
O
J
N
M
B
F
C

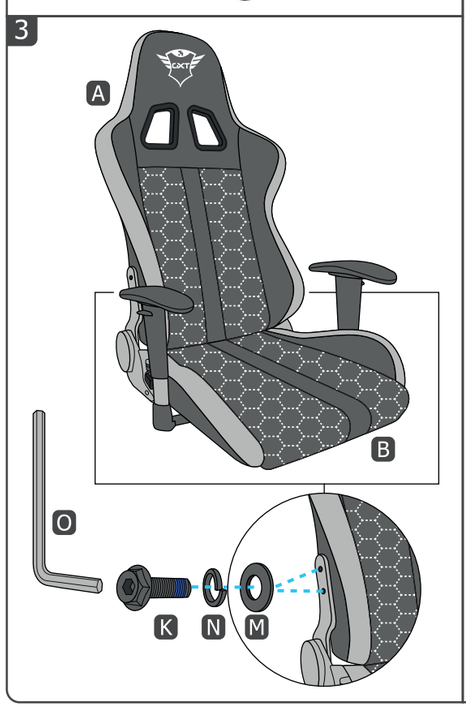
3
A
B
O
K
N
M

4
O
L
D

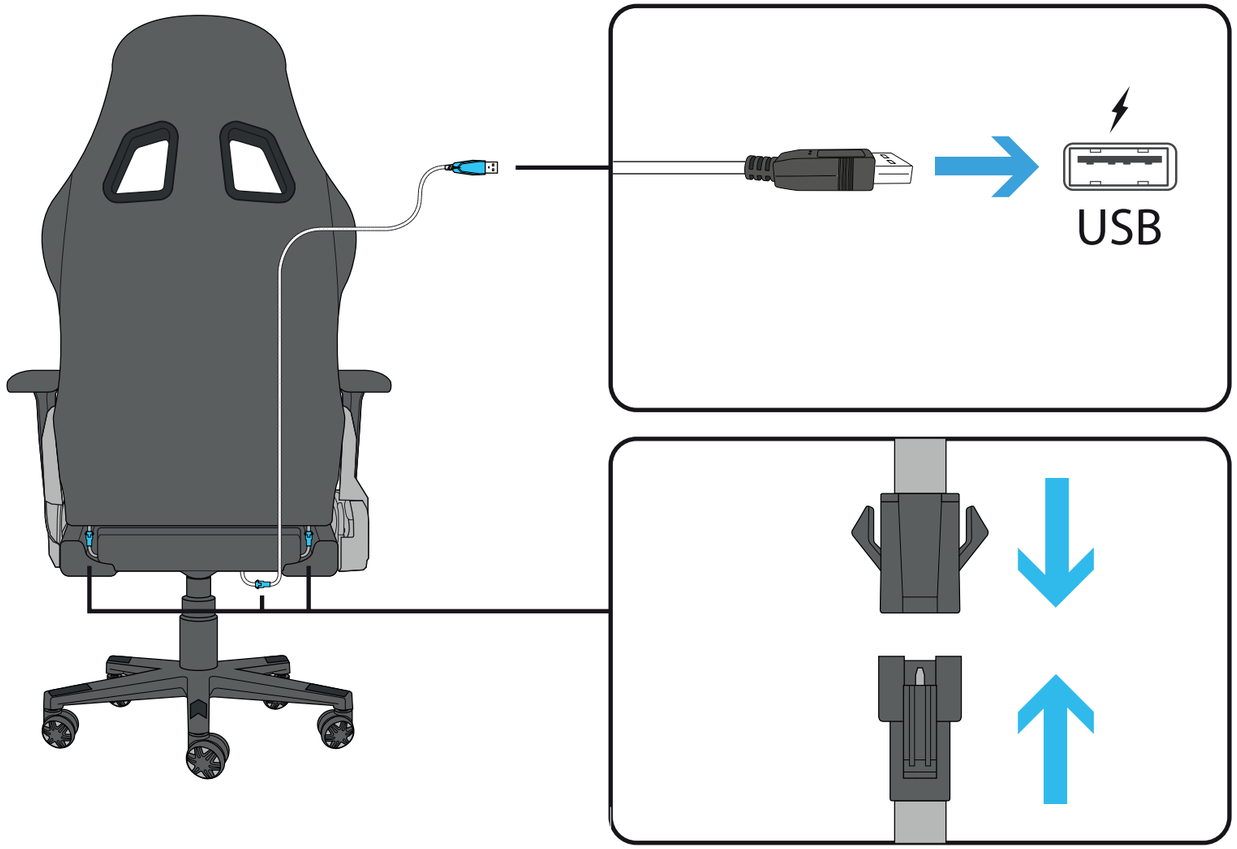
USB

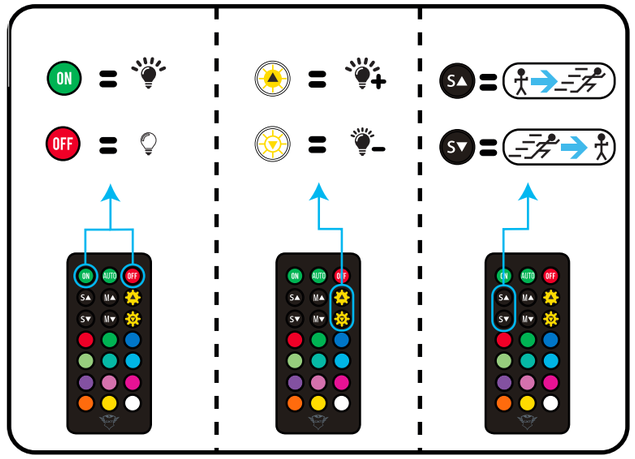
ON
OFF

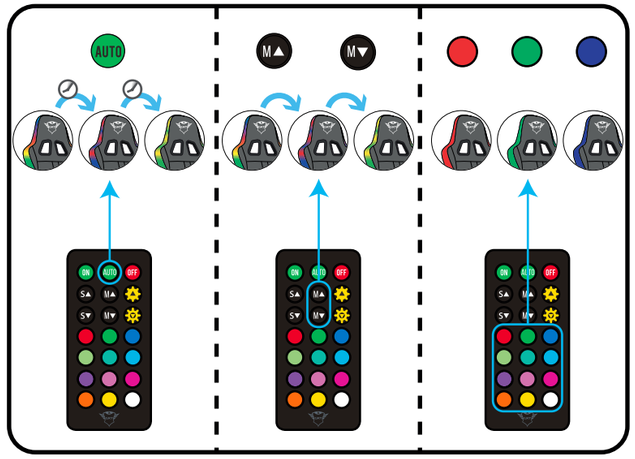
AUTO