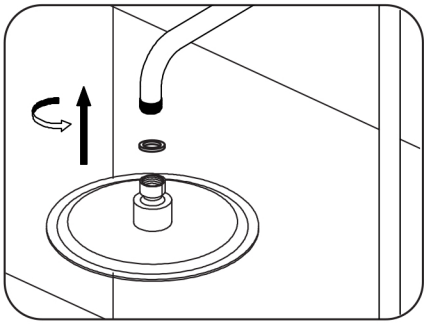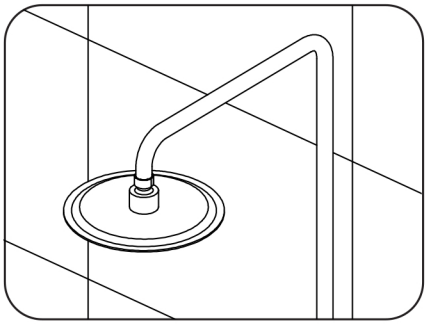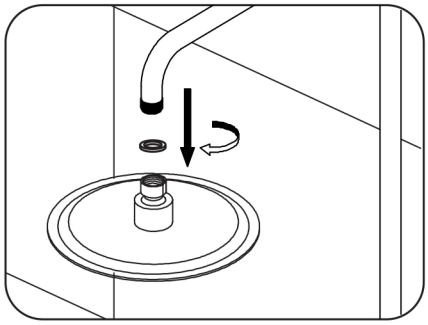deante